

32mm DC Motor - 19mm Type Shown on 6mm Isometric Grid

PRECISION MICRODRIVES™

Product Data Sheet
Miniature Core™
32mm DC Motor - 19mm Type

Model: 132-100

Ordering Information

The model number 132-100 fully defines the model, variant and additional features of the product. Please quote this number when ordering.
For stocked types, testing and evaluation samples can be ordered directly through our online store.

Datasheet Versions

It is our intention to provide our customers with the best information available to ensure the successful integration between our products and your application. Therefore, our publications will be updated and enhanced as improvements to the data and product updates are introduced.
To obtain the most up-to-date version of this datasheet, please visit our website at:
www.precisionmicrodrives.com
The version number of this datasheet can be found on the bottom left hand corner of any page of the datasheet and is referenced with an ascending R-number (e.g. R002 is newer than R001). Please contact us if you require a copy of the engineering change notice between revisions.

If you have any questions, suggestions or comments regarding this publication or need technical assistance, please contact us via email at:
enquiries@precisionmicrodrives.com or call us on +44 (0) 1932 252 482

Key Features

Body Diameter:	32 mm [+/- 0.2]
Body Length:	19.3 mm [+/- 0.2]
Shaft Orientation:	Inline
Rated Operating Voltage:	4.5 V
Rated Load:	1 mNm
Rated Load Speed:	1,800 rpm
Typical Max. Output Power:	320 mW

Typical DC Motor Performance Characteristics

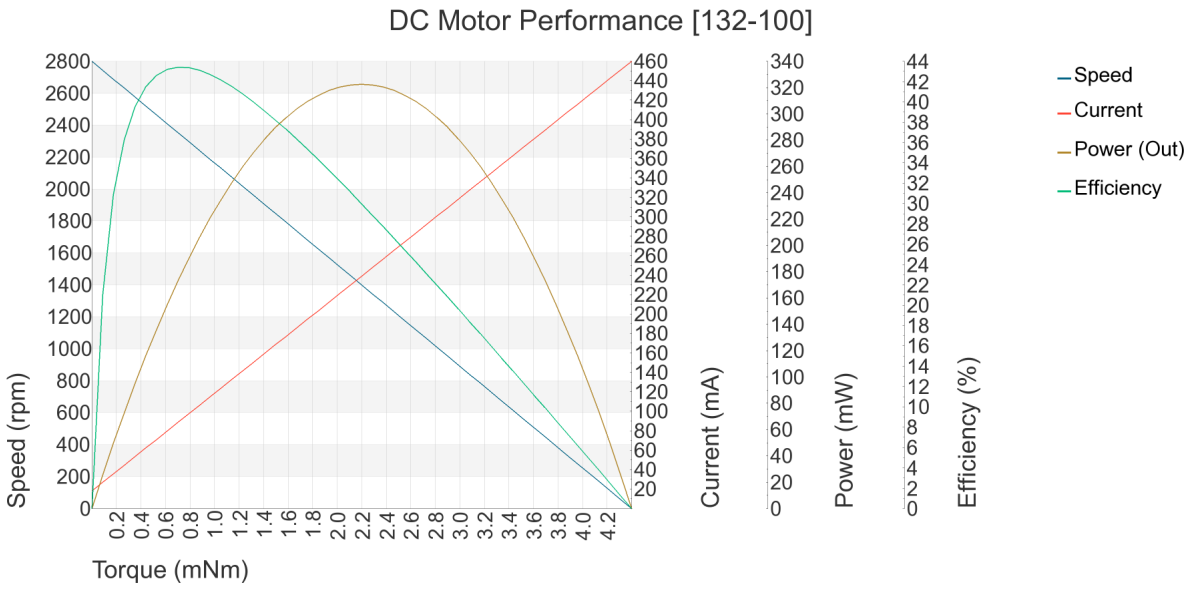

© 2015 Precision Microdrives Limited

1 / 5

Understanding Precision Microdrives Specification and Production Stages

Precision Microdrives Specification Stages

Precision Microdrives is run on processes and we guide all customers through sets of predefined specification stages as they move from prototype to production. These are designed to allow the flexibility to iterate designs with the eventual certainty required for production parts.

Base	Sampling	Pre-Production	Production	EOL
Used for factory downselection Typically 0 units	Used for validating prototypes Typically ~ 10 units	Used for validating initial production Typically ~ 1k units	Used for validating mass production Typically >5k+ units	Used as basis for product replacement 'Base' spec Typically 0 units

Precision Microdrives Capabilities and Competences

Precision Motor Testing and Motor Testing Services

When we started PMD there were no commercial testing machines available, so we built our own. Ever since we've continued to develop new motor testing machines & procedures each year. Fast forward to today and we now have the most extensive testing facilities in the world for sub 40mm diameter motors, gear motors and vibration motors. These are used to validate motors through specification stages and during manufacturing. We also test motors as a service, provide easy to read reports and assist customers with their interpretation.



Motor Customisation, Design, and Manufacturing

To be useful motors need to be integrated with other parts, such as housings or couplings . We routinely develop and produce complete assemblies, from motors with customised leads or connectors to complete electromechanical mechanisms and integrated control electronics. We will support and guide you through the specification stages from prototype to signing-off for mass production.



Competent and Dependable Supply Chains for Production

Most of the worlds miniature motors are made in Asia, and you need engineers on the factory floor who can maintain the Western values of "doing things right" whilst supporting the Asian values of "getting things done". As a customer you are supported by expert eyes, right at the heart of the manufacturing process where it is needed: On the ground in the UK, Hong Kong, and China.

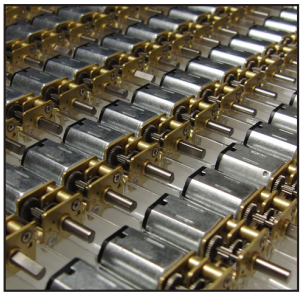

Quality Engineers on the Ground and Local Engineering Teams

The nature of our business is to confidently produce and supply motors 'On time & To spec'. Our customers benefit from our certified ISO 9001 quality systems, reliable motor production infrastructure, and experience. We have a core competence in helping customers design out over-specified and expensive European drives, with more cost-effective, adequately specified, and verified Asian alternatives.



© 2015 Precision Microdrives Limited

Physical Specification

PARAMETER	CONDITIONS	SPECIFICATION
Body Diameter	Max body diameter or max face dimension where non-circular	32 mm [+/- 0.2]
Body Length	Excl. shafts, leads and terminals	19.3 mm [+/- 0.2]
Unit Weight		39.3 g
No. of Output Shafts		1
Shaft Diameter		2 mm
Shaft Orientation		Inline
Shaft Length	Measured from motor body face	13.3 mm [+/- 0.3]

Construction Specification

PARAMETER	CONDITIONS	SPECIFICATION
Motor Construction		Iron Core
Commutation		Precious Metal Brush
Rotation Direction	As viewed from the primary shaft end / or motor top	CW
No. of Poles		3
Bearing Type		Sintered Bronze

Operational Specification

PARAMETER	CONDITIONS	SPECIFICATION
Rated Operating Voltage		4.5 V
Rated Load	Maximum continuous torque	1 mNm
Rated Load Speed	At rated voltage under fixed torque at rated load	1,800 rpm
N/L Speed	Measured at rated voltage	2,800 rpm [+/- 280]
Max. N/L Current	Measured at rated voltage	30 mA
Max. Start Voltage	Measured at no load	1 V
Max. Operating Voltage		6 V
Max. Start Current	At rated voltage	460 mA
Max. Rated Load Current	At rated voltage under fixed torque at rated load	140 mA
Min. Insulation Resistance	At 50V DC between motor terminal and case	10 MOhm

© 2015 Precision Microdrives Limited

Important: The characteristics of the motor is the typical operating parameters of the product. The data herein offers design guidance information only and supplied batches are validated for conformity against the specifications on the previous page.

Typical Performance Characteristics

PARAMETER	CONDITIONS	SPECIFICATION
Typical Rated Load Power Consumption	At rated voltage and load	530 mW
Typical N/L Current	At rated voltage	18 mA
Typical Start Current	At rated voltage	460 mA
Typical Peak Efficiency		43 %
Typical Peak Eff. Torque		0.7 mNm
Typical Peak Eff. Speed		2,400 rpm
Typical Peak Eff. Current		89 mA
Typical Peak Eff. Power Out		175 mW
Typical Max. Output Power		320 mW
Typical Terminal Resistance		10 Ohm
Typical Terminal Inductance		12,000 uH

Environmental Characteristics

PARAMETER	CONDITIONS	SPECIFICATION
Max. Operating Temp.		60 Deg.C
Min. Operating Temp.		-10 Deg.C
Max. Storage Temp.		85 Deg.C
Min. Storage Temp.		-30 Deg.C

Typical Packing Conditions

PARAMETER	CONDITIONS	SPECIFICATION
Carton Type		Boxed Trays

© 2015 Precision Microdrives Limited

Product Dimensional Specification

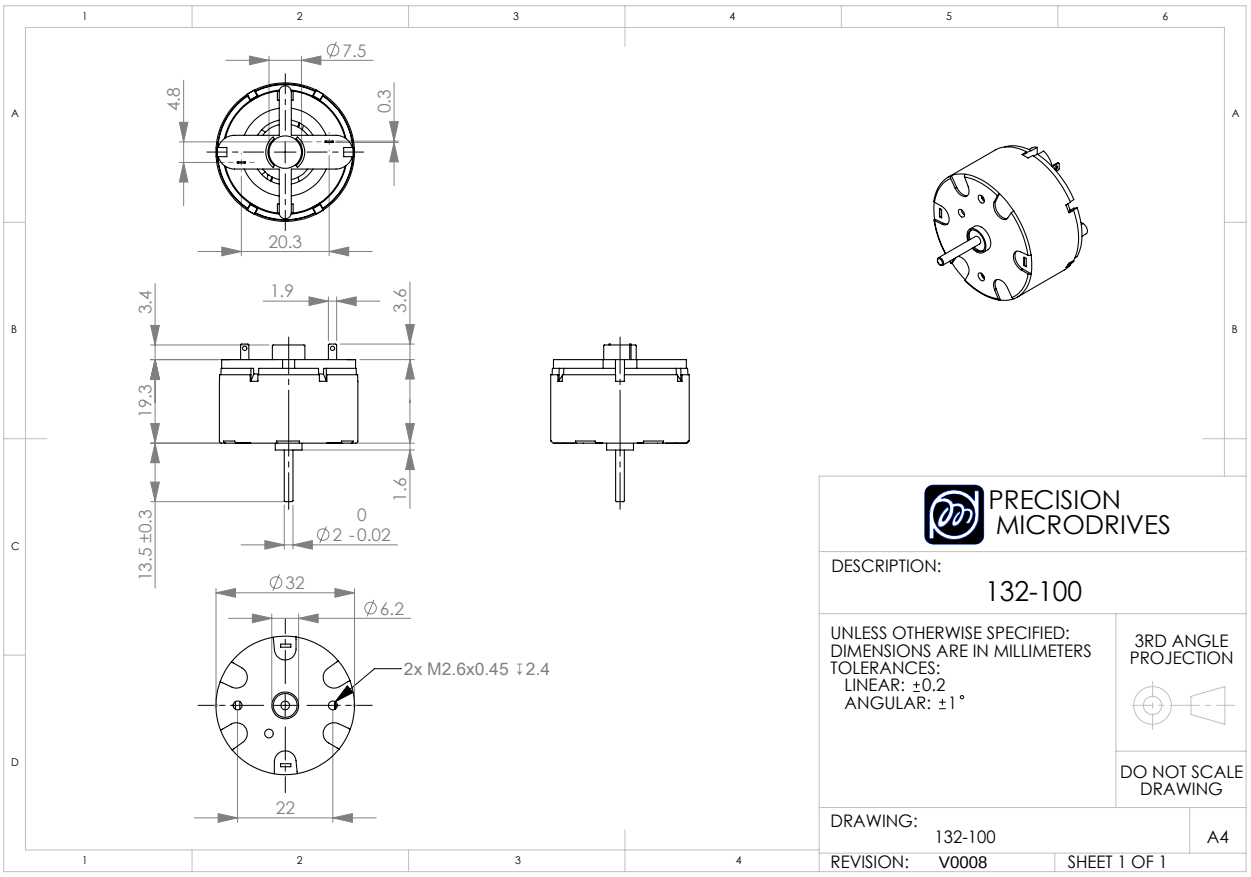

Life Support Policy

PRECISION MICRODRIVES PRODUCTS ARE NOT AUTHORISED FOR USE AS CRITICAL COMPONENTS IN LIFE SUPPORT DEVICES OR SYSTEMS WITHOUT THE EXPRESS WRITTEN APPROVAL OF PRECISION MICRODRIVES LIMITED.
As used herein:

1. Life support devices or systems are devices or systems which, (a) are intended for surgical implant into the body, or (b) support or sustain life, and whose failure to perform when properly used in accordance with instructions for use provided in the labeling, can be reasonably expected to result in a significant injury to the user.

2. A critical component is any component of a life support device or system whose failure to perform can be reasonably expected to cause the failure of the life support device or system, or to affect its safety or effectiveness.

Precision Microdrives Limited

Canterbury Court, 1-3 Brixton Road
London
SW9 6DE
United Kingdom

Tel: +44 (0) 1932 252482
Fax: +44 (0) 1932 325353
Email: enquiries@precisionmicrodrives.com
Web: www.precisionmicrodrives.com

Registered in England and Wales No. 5114621
VAT registration. GB 900 1238 84

© 2015 Precision Microdrives Limited